NOTES:

1. ALL METAL PARTS TO BE HOT DIPPED GALVANISED IN ACCORDANCE WITH AS/NZ 4680:1999 AND PAINTED "BRUNSWICK GREEN". 100mm HIGH ROUTED LETTERING ON BOTH SIDES OF POST NEAREST FOOTPATH.
2. ALL MEASUREMENTS ARE IN MILLIMETRES.

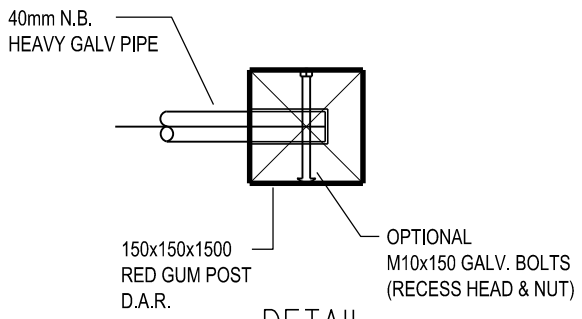

DETAIL

SCALE 1:20

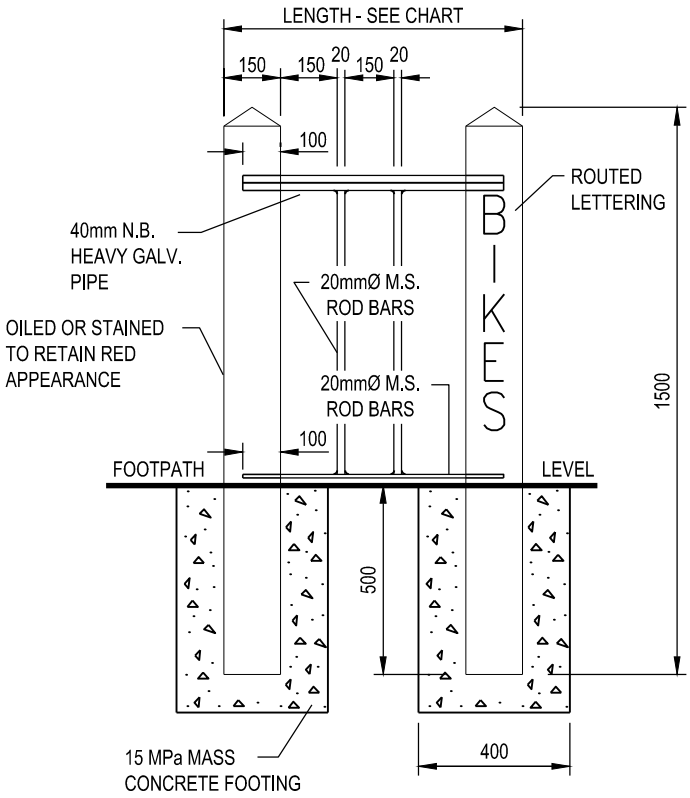

FRONT ELEVATION

SCALE 1:20

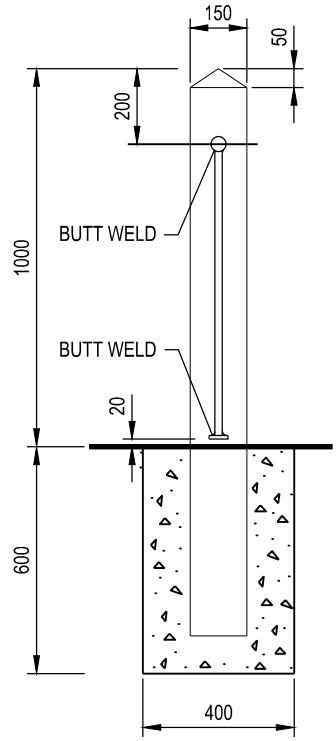

SIDE ELEVATION

SCALE 1:20

RAIL LENGTHS

NO. OF BIKES	TOP & BOTTOM RAIL (mm)
4	860
6	1200
8	1540
10	1880
12	2220

MORNINGTON PENINSULA Shire

STANDARD PLAN

TIMBER & STEEL BICYCLE RACK

MANAGER - INFRASTRUCTURE PROJECTS

DATE OF ISSUE	10/01/2025
SHEET NO	1 OF 1

MP806