NOTES:

1 ALL MEASUREMENTS ARE IN MILLIMETRES.

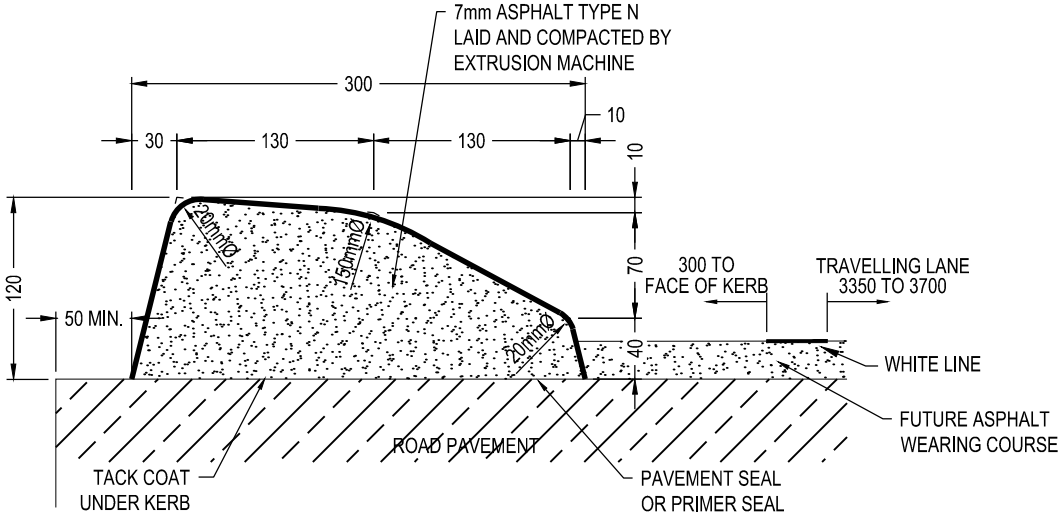

ASPHALT KERB 1
(ASPHALT WEARING COURSE)

SCALE 1:5

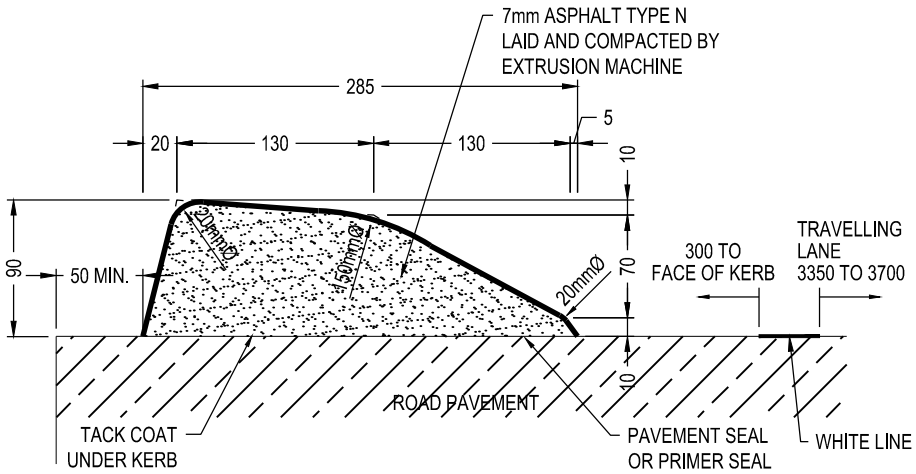

ASPHALT KERB 2
(SPRAYED SEAL)

SCALE 1:5

MORNINGTON
PENINSULA
Shire

STANDARD PLAN

ASPHALT KERB
(ASPHALT WEARING COURSE)

MANAGER - INFRASTRUCTURE PROJECTS

DATE OF ISSUE	05/12/2024
SHEET NO	1 OF 1

MP110